.....4

p 5

1.1 ў ⅃ تن 5
1.2 ў 5
1.3 5

γ 8

Ь 9

3.1 جه 9
3.2 جه Э 9
3.3 جه 9
3.4 سم 10
3.5 10
3.5.1 10/100/1000Mbps RJ-45 11
3.5.2 ˝ا 11
3.6 11
3.7 ȁ 11
3.8 ⅃ 11

ني 13

A —— لا Ռ 15

ȁ 1000BASE-T/100BASE-TX/10BASE-T 15
γ ȁ ˝ا 16

B ——SFP (MINI-GBIC) هج 17

ȁ MINI-GBIC ˆ SFP˜ هج صر Ռ 17

ˇ ̈Ạ ̀и ˇ ˧Ɲ ╗ Ɲ Â

تمن

̈Ạ ў ˇ ầ ầ ˇ

Ɲ ˧ Ɲ ⅄ Ɲ Â Э ʒ جه Ɲ ɛ́

Â Ɲ Ɲ Â

ˌ“” “ ᵽ ” ᵽ ˇتمن ў ˇ . Ḥ

Ᵽ

1.1 ў ⅃ تن

Ю ˘ '
, صر Ⴖ صر '
, عج ˘ '
, '
, 8˘ à 8 Ⴖ 8 '
, ⱡ ˘ ╟ Ⴖ à ⊾ ⅃ ⊾ Â

1.2 ў

⅄ ˘ ⅃ Ⴓ γ Ⴖ Ь
˘ جه Э ⅄˘ à à سه Â
S5760-24GT/4SFP—— 20 10/100M/1000Base-T Ⴖ 4 combo SFP '
S5760-48GT/4SFP—— 44 10/100M/1000Base-T ˘ 4 combo SFP
S5760 ў Ю '
, L2/L3
S5760-24GT/4SFP 48G ˘ 35.72Mpps (64) γ ⅃ ѝ
Â
S5760-48GT/4SFP 96G ˘ 71.43Mpps (64) γ ⅃ ѝ
Â
, RJ45 MDI/MDIX ╟ ╖ Â SFP SFP هج˘ SFP ╖ Â
,
S5760 ˘ ACL à QOS ╖ ˘ ╖
؛ Â
,
S5760 8 ˘ à AAA à 802.1X à 8 ⅄ ʒ à VLAN ǂ à
ACL 8˘ CPU ╖ Â
˘ 802.1D à 802.1W à 802.1S ˘ Â
,
ǂ Ⴖ QOS ˘ ѝ Â
IGMP snooping à ⊾ ´ Â

1.3

⅃Ю Ᵽ في

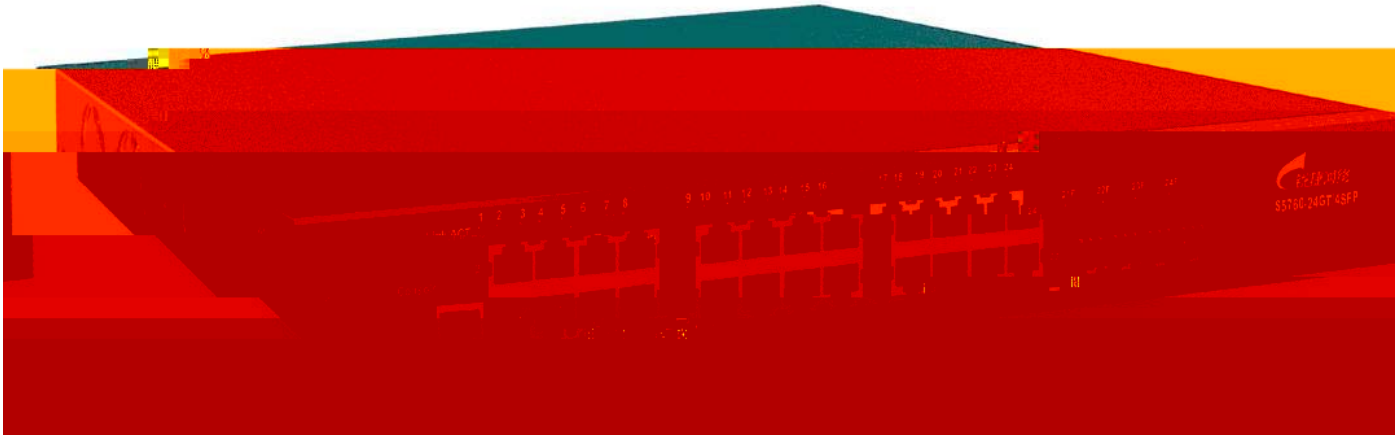

في S5760-24GT/4SFP في

S5760-24GT/4SFP في

Power		ˈ Э ˈ ˧˩
Console		∩ PC ˘
Link/ACT		ˈ LINK Э ˈ

S5760-24GT/4SFP ˩˧ في

˩˧		

1 ǖ ȯ

S5760-48GT/4SFP ٨ في

٨		
1		
2	سم	سم

γ

	IEEE802.3 à IEEE802.1x à IEEE802.1p à IEEE802.3ae IEEE802.1Q à IEEEE802.1d à IEEE802.1W IEEEE802.1S à IGMPv1/v2/v3 Snooping
	SNMPv1/v2c/v3 à Telnet à Web-based à Console à CLI à RMON
ص ㄱ	S5760-24GT/4SFP' 20 10/100/1000 M RJ45 ∩ 4 SFP combo ˆ 1000BASE-SX/LX ˘ 1000BASE-TX ˘ 1000BASE-LH˜ ' S5760-48GT/4SFP' 44 10/100/1000 M RJ45 ∩ 4 SFP combo ˆ 1000BASE-SX/LX ˘ 1000BASE-TX ˘ 1000BASE-LH˜ '
ㄱ	**1000BASE-SX**(850nm) 62.5/125um MMF : 220M **1000BASE-SX**(850nm) 50/125 um MMF : 500M **1000BASE-LX**(1310nm) 9/125 um SMF: 10KM (˝l й 550M) **1000BASE-LH**(1310nm) 9/125 um SMF: 40KM 1**0/100/1000BASE-T**: 100M(UPT) ' RJ45 ╟ MDI/MDIX ╖
LED	S5760-24GT/4SFP' Power à Link/ACT S5760-48GT/4SFP' Power à Link/ACT
ص (W x D x H)	S5760-24GT/4SFP ' 440mm × 260mm ×44mm S5760-48GT/4SFP' 440mm × 400mm ×44mm
ˆ Kg˜	S5760-24GT/4SFP' 6Kg S5760-48GT/4SFP' 8Kg
	176˙ 264 Vac
	1 A
	50˙ 60Hz
╖	S5760-24GT/4SFP' 40 W S5760-48GT/4SFP' 125W
	0 45°C 10% 90% RH -40 70°C

Ь

3.1 جه

ر جه Â جه Ռ ˘ ‘ ’
p Â

“ ˆ ”’ جه Э ˘ Â

“ ”’ a جه سه ˘ Ռ Â

“ ”’ جه ˘ ˧ سه Ш Â

3.2 جه Э

Ї 4 شخ جه ني مه Â
γ جه Э˘ Ռ تن سه ╟ Â
˧ جه Э ˘ Ю في Â

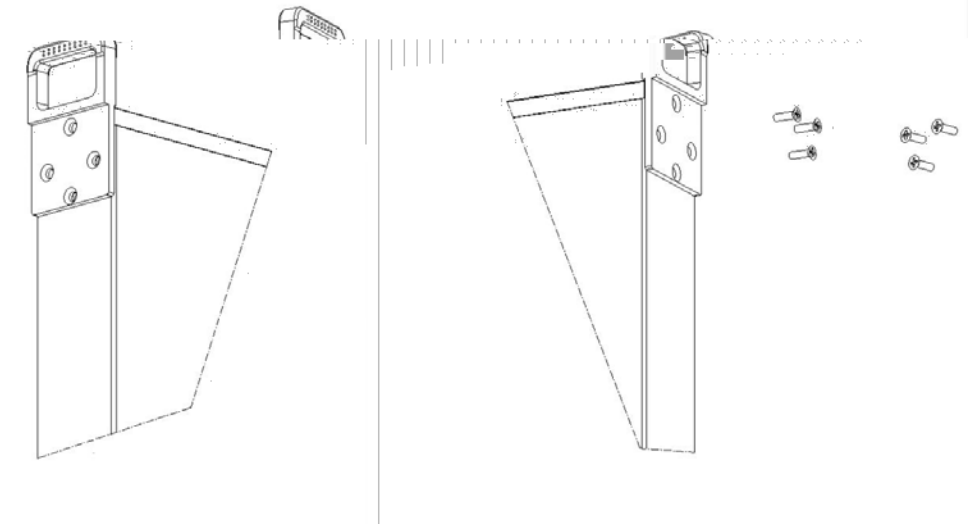

في 3-1 في

في Э Â Э ني ˘ ˘ Â

“ ˆ ”’ ѝ ˘ جه a 45°C سه ˘ ѝ έ
˘ ني 10cm Â

“ ”’ جه ˘ p ˘ a جه Э Â

3.3 جه

˧ Ռ جه 19

3.5.1 10/100/1000Mbps RJ-45

RJ-45 ˘ 3 à 4 à 5 10MbpsЛ ’
5 100Mbps Л 1000Base-T Â ´ è / Ы
RJ-45 ˘ RJ-45 Â RJ-45 ˘ Э
Â

“ ˆ ”ˈ a RJ-45 ˘ ĭ √ مح Â

“ ”ˈ a 100 Â

3.5.2 ˝ı

б ˝ı ھج ˆ SFP à XENPAK à XFP ˝ı ھج ˜ ٦ Ы ˝ı Э
˝ı ھج Â RX Ռ TX ˘ Л ˝ı Â ˝ı Э
Â
“ ˜ ”ˈ ˝ı ˝ı ھج ˝ı ˘ ˝ı ˘ جه Ю a √Л ˝ı
ھج б ˝ı ˘ Л Â

3.6

جه ˘ Ю ˆ Ռ Y Â

“ ˆ ”ˈ جه б ˘ б ˘ Л مح Â

“ ”ˈ ɛ́ سه 3 ˘ 3 Ռ a 1.5 Â

“ ”ˈ ѝ سه √ ˘ Л سه ˘ ɛ̀ سه Â
Ю ˈ
Л Э Â
Y Â
Ь Â
ني “Power ”LED ĭ Â

3.7 ȁ

Ю LED ĭ سه Ռ Â
7˙ 1 Powerˈ ’ ’
7˙ 2 ˈ Link/ACT б Э’ Link/ACT جه ’

3.8 √

Ю √ ˘ ĭ عج Ռ Â
CLI Ԝ ʒ ˘ 8 √ ˆ Console˜
PC Â Â PC صر Â

ù Ю ' 9600 8 1 Â

CLI CLI Â

/RJ45-RJ45 ' б DB-9 RJ45

DB-9 PC Â PC

DB-9 Â

ني

“ ˆ ”ˈ ѝ ˘ جه ˘ جه a Ю˘ a Â

“ ˆ ”ˈ √ ˘ ˘ ж ˘˜ Â

“ ”ˈ جه ˘ ˘ ˝l ˘ a √Л Â

http://www.ruijie.com.cn

5'

ò Ô

A —— ⅄ ∩

ầ 1000BASE-T/100BASE-TX/10BASE-T

1000BASE-T/100BASE-TX/10BASE-T Ь ˘ جه Ь Ю
╟MDI/MDIX Crossover ╖ Â1000BASE-T IEEE 802.3ab ˘ 100-ohm
5 5 UTP STP˘ ɜ 100 Â 1000BASE-T
4 ˘ 4 Э Â1000BASE-T
فيA-1 ˈ

فيA-1 1000BASE-T ني

		ϑ	
Switch	Switch	Switch	Switch
1TP0+	1TP0+	1TP0+	1TP0+
2TP0-	2TP0-	2TP0-	2TP0-
3TP1+	3TP1+	3TP1+	3TP1+
6TP1-	6TP1-	6TP1-	6TP1-
4TP2+	4TP2+	4TP2+	4TP2+
5TP2-	5TP2-	5TP2-	5TP2-
7TP3+	7TP3+	7TP3+	7TP3+
8TP3-	8TP3-	8TP3-	8TP3-

γ ầ ˝ا

A-4: في في ˘ ὲ ˘ ا˝ ˘صر هج ا˝ ا˝

في A˙ 4 ˝ا في

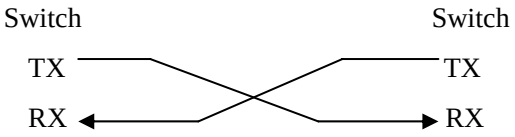

http://www.ruijie.com.cn

B ——SFP (Mini-GBIC) هج

SFP هج ˆ Mini-GBIC هج˜˜ ˧ ⎍
ˆ SFP هج˜ ˆ SFP صر ⎍ ⎍ Â

à Mini-GBIC ˆ SFP˜ هج صر ⎍

في B-1 SFP هج صر ⎍

Mini-GBIC ˆ SFP˜	ˆ nm˜	صر	ˆ ˜	ˆ MHz/km˜		ˆ dbm˜ MAX	ˆ dbm˜ MAX	
Mini-GBIC-SX	850	˜ا	62.5 62.5 50.0 50.0	160 200 400 500	220 275 500 550	-4	-17	IEEE802.3
Mini-GBIC-LX	1300	˜ا ˜ا	62.5 50.0 50.0 9/10	500 400 500 -	550 550 550 10	-3	-20	
Mini-GBIC-ZX50	1550	˜ا	N/A	N/A	50	0	-22	
Mini-GBIC-ZX80					80	4.7	-22	
Mini-GBIC-GT	N/A	CAT 5 UTP	N/A	N/A	100	N/A	N/A	