C

ǯ AP ɛ AM5528 ζ Ḡ Ꝑ

ʹ ʮ Ṫ Ă | Ḡ Ꝑ ₱ ʮ ˙ ˝Y ḧ ɥ ɻ | Ḡ Ꝑ ª ₅ ▛

Ḡ Ꝑ ₱ ʮ ▭ ʸ ˡ ĩ ᵉ ʒ ˙ ˝Ǫ♬ ˩ ∂

Ḡ Ꝑ ₱ ʮ ▭ ʸ ˡ ĩ ᵉ ʒ ˙ □ ů ⊃ ▶ ů ▭ ˩ ∂

Ḡ Ꝑ ˩ ĩ ᵉ Ṭ ṵ ɻ Ḅ ɔ ◊ ⊃ ◗ ʹ Ḿ ɔ ╚ ˩ ∂

Ḡ Ꝑ ˩ ĩ ᵉ Ṭ ṵ ɻ Ḅ̓ ʜ ɻ ʌ ᵽ ɻ

RG-AM5528 Ẓ ǐ ƥ ʔ ɬ Ö ʒ ª ˻ — ɒ ʹ 10cm ▭ ʌ ʒ ı ⓪ ⓚ ⓚ ʌ ↔ ▭ ╚ ᶇ ı . Ʒ ˝Ǫ♬*

Ẃ ق Φ ƥ ف ì i ᴿ ʔ ʎ ɻ ª ı Ẓ ˝Ǫ ɲ ǎ ɻ ã ˝Ǫ ɲ Ḅ ⓦ ɻ ƥ ᵽ ɻ " i ı ɜ d ⓦ ɥ ق ɩ Æ

ḧ Ǫ ᵵ ṇ ɛ ã ɲ 3 Ʌ ⓦ Ꝁ ζ ı ɜ d ˺ ṇ ˡ ˩ ˢ i ▭ ɻ ˥ ˝Ǫ♬ ḍ

ʒ AP ε AM5528 ζ Ḡ Ḷ

´ ʮ Ṫ Ă | Ḡ Ḷ Φ ʮ ˙ ˝Y ḧ ɥ ɻ | Ḡ Ḷ ᵃ ₅ ˥

Ṅ Φ ʮ* ɻ ı ۞ ɡ Ṫ Ă ᴶ i o ˡ

Ẓ Æ ɾ Ḿ Ẓ ʒ ˅ OBJ ɔ ◊ ɹ ق ì Ḿ Ẓ OBJ ì ɹ˥ i

. Ʒ ɔ ◊ ě ɔ ɹ OBJ ì Æ ЉΦ ʮ OBJ ɔ ◊ ì Æ ì Ù ˅ Ḅ Φ ʮ ɡ ȧ i ɔ ◊ ɹ Ɑ ᵃ ı Ẓ Ṅ ɔ

◊ ɹ ɾ ɔ ◊ ɹ گ ˅ Ʒ ĭ Ḅ

Ю ˅ ɡ RG-AM5528 Φ ʮ i Ȧ ۞ ɻ γ Ḿ ɾ ß

ɡ Φ ʮ ˘ ɡ ũ ʼ ʒ OBJ ۺ l ۷ ʒ ε 10 т ۷ Ɑ i ζ Ɑ Ʒ ˅ Ḅ OBJ ˝Ω♬ ı ت ɿ ˡ ۞ ɻ

RG-AM5528 Ṫ Ă ş ᴾ ڤ ˅ Ă ı ' ṇ ɹ ɔ ʌ ṃ ᴶ ۺ ژ ۺ ʌ ṃ ᴶ ح إ ʒ ɔ ╙ Φ ʮ ψ ọ ɻ

ˋ H ۺ п ɔ ˅ Ṛ Ω OBJ Ȧ | ı ḅ ì Æ ɔ ɹ ۺ ɾ Ṛ Ω ɔ ɹ

˜ ۷ ɻ ɹ ɹ ɹ ɻ ∂ ɡ í ɲ ȯ ɹ ı ˅ Ḅ ˝Ȧ ᵘ ȯ ɹ ḅ ɻ í ᵘ ȯ ɹ ı ت Ȳ Ḅ ˅ ʜ OBJ گ ۺ ù

Ạ

ʒ AP ɛ AM5514 ʐ Ḡ Ŧ

ʻ ʮ Ṫ Ă | Ḡ Ŧ ⧩ ʮ ˙ ʺY ḧ ɥ ɻ | Ḡ Ŧ ᵃ ₅ ˥

Ḡ Ŧ ⧩ ʮ ⧈ ʏ ˡ ĩ ᵋ ʒ ˙ ʺQ♬ ˩ ∂

Ḡ Ŧ ⧩ ʮ ⧈ ʏ ˡ ĩ ᵋ ʒ ˙ □ ỷ ⊃ ▶ ỷ ⧈ ˩ ∂

Ḡ Ŧ ∫ ĩ ᵋ Ṭ ṵ ɻ Ḅ ɔ ◊ ⊃ ◗ ʼ Ḿ ɔ ╚ ˩ ∂

Ḡ Ŧ ∫ ĩ ᵋ Ṭ ṵ ɻ Ḅ ʰ ʜ ɻ ʌ ب ɨ

RG-AM5514 Ẓ ỉ ɸ ʌ ɬ Ə ʒ ᵃ ˭ — ɒ ʼ 10cm⧈ ʌ ʒ ˡ ɑ ⚙ ʌ ↔⧈ ╚ ɳ ˡ. ʒ ʺQ♬*

Ẃ ڤ Φ

ʒ AP ɛ AM5514 ζ Ḡ Ḫ

´ ʮ Ṫ Ă | Ḡ Ḫ Ф ʮ ˙ ˝Y ḧ ɧ ⅃ | Ḡ Ḫ ª ₅ ▛

RG-AM5514 G r Ä (`\À~ E•WF ñ ñ 3t•x I IÎ % E•WF ô¸QYo c7 ‘•¸Ð±ðsPŸ`UP

: RG-AM5514㊚ڳڳ˝Y ǎ ˙ ˜Ḥ˙Y ب ɔ ˄ ˢ ˝Y₩ Ã ı

Ḡ Ḫ ص ˄ ḃ ï χ

˙ ɲ¸ ɑ ɯ ɲ㊚ ѣ Ѧ˝Y ᵐ —ɑ ˆ A

ʒ AP ε AM5514 ζ Ḡ Ḫ

´ ʮ Ṫ Ă | Ḡ Ḫ ϕ ʮ ˙ ˝Y ḧ ɱ ɹ | Ḡ Ḫ ª ₅▛

: ₅▛ ʂ ɻ ĩ ᵋ ف ì

˙ ₅▛ ب ɹ ɔ ɻ ɔ ◊ ژ ʔ ɻ ɻ ĩ ᵋ ف ì*

. ψ

, ₅▛ ˘ ৲ ɹ ɻ ĩ ᵋ ũ ɱ ĭ ᵘ ȣ ɻ ۷ ũ ĭ

ᵘ ȣ ɻ OBJ ù˘ ı ت ₅▛ ĩ ᵋ ڤ Φ˘ ᒥ ᒪ د

◊ گ ᵽ ᵠ ṇ ɹ Æ گ ᵽ ʰ ৲ ف ì

‚ ₅▛ ϕ ʮ ᵕ ɱ ũ ʼ ʒ OBJ Ω♬ ৲ ژ ε 10 т ৲

ɑ i ζ

ǐ APḠ Ḭ

ʹ ʮ Ṫ Ă | Ḡ Ḭ Ф ʮ ˙ ˝Y ḧ ɲ ⅃ | Ḡ Ḭ ª ₅ ▛

ت Ṅ Ф ʮ ۞ ۞ ۞

ĭ APḠ Ḫ

ʿ ʮ Ṫ Ă

Ḡ Ḫ ɔ

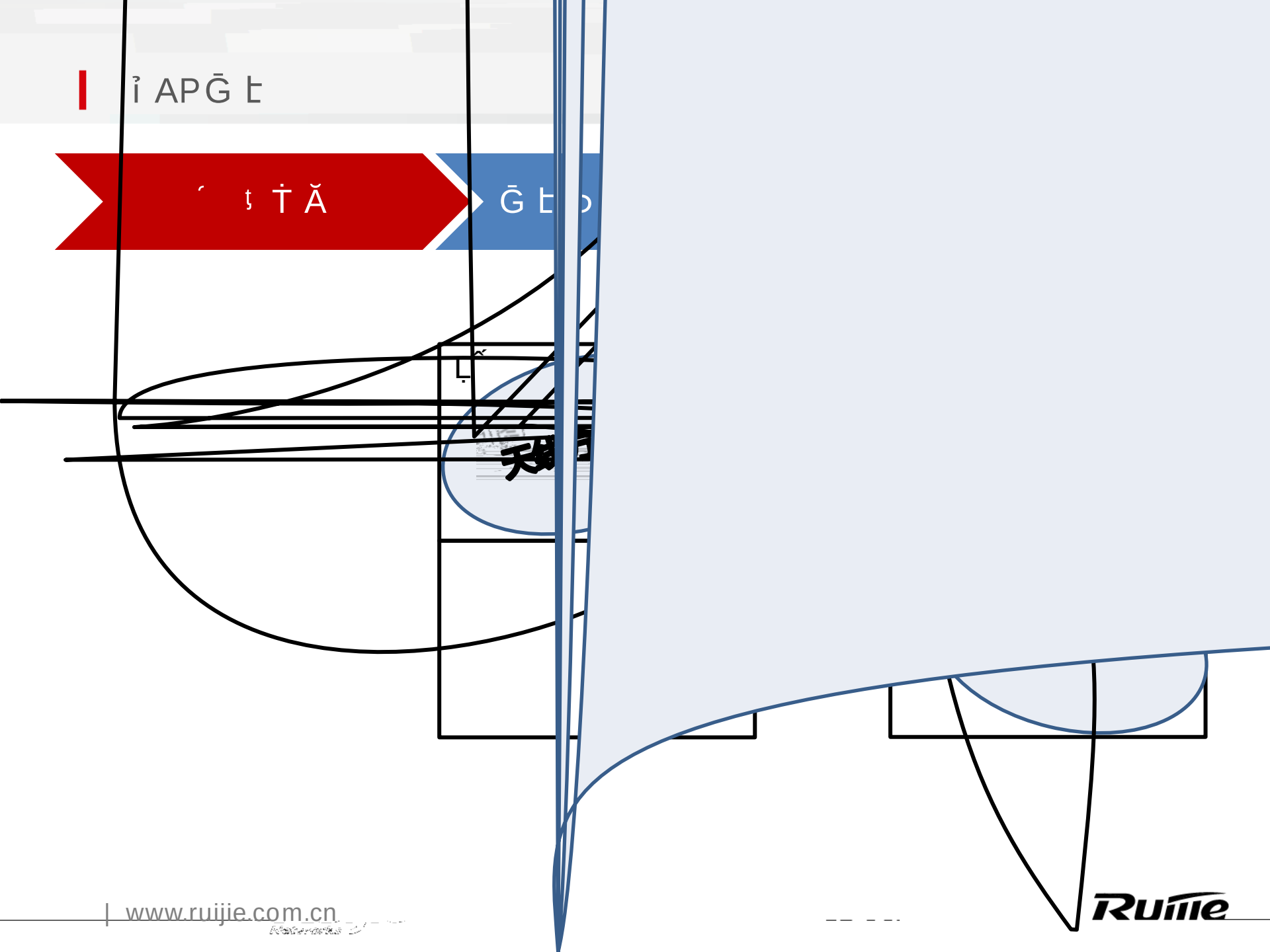

ỉ APḠ Ḭ

´ ʮ Ṭ Ă | Ḡ Ḭ ₱ ʮ ˙ ˝Y ḧ ɥ ⌋ | Ḡ Ḭ ª ₅ ⍑

MAP552

: ƥ ᵐ ᴺ ỉ ف Ḡ ২ ḍ ı ̃Α͂Ι ২ w ḍ ḧ ȧ ı Ṅ ˝Y ˝ ২ Ẋ ḍ ḧ

˙ Ṅ ⱬ ů ª OBJ ḳ ḍ Ḿ´ ˝Y ˝ OBJ ˝Y ˈE

, ⌐´ Ḡ Ḭ Ṁ ḍ ı Ṅ ⱬ ʁ ỉ Ề ï ò ২ ˈE ⌋

‹ Ḡ Ḭ گ ˘ ˝Y ⸮

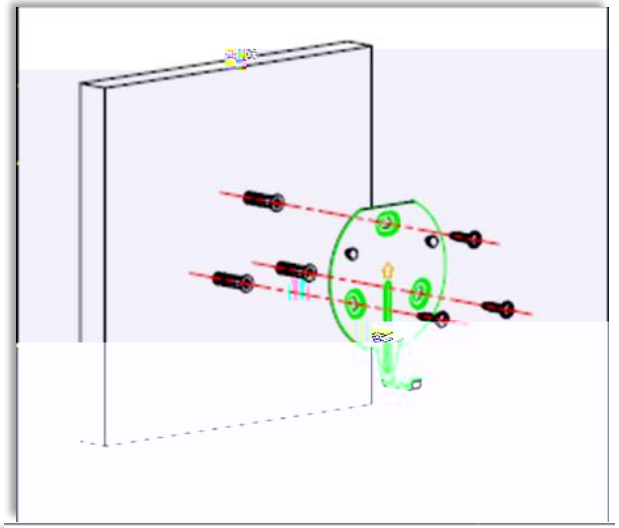

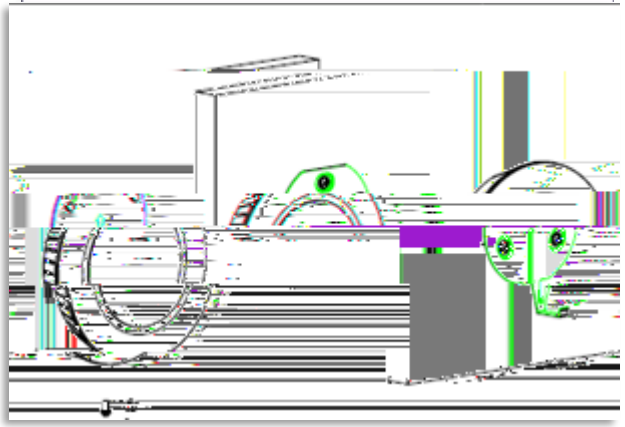

ǐ APḠ Ḭ

´ ʮ Ṫ Ă | Ḡ Ḭ Φ ʮ ˙ ”Y ḧ ɥ ⅄ | Ḡ Ḭ ª ₅ ⍑

MAP552-W

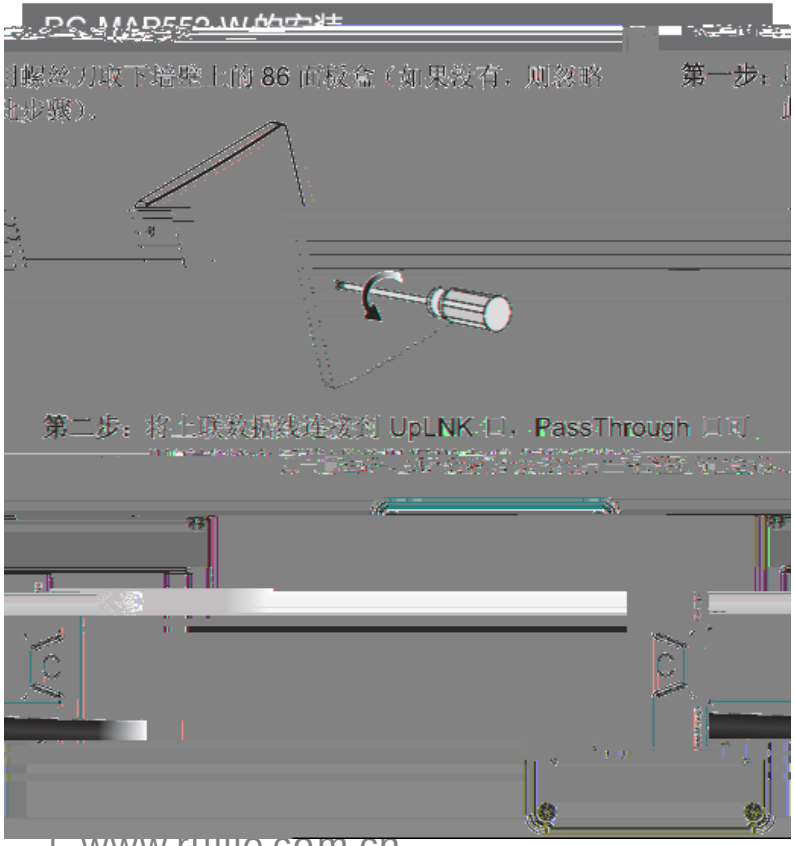

ǐ APḠ Ḭ

´ ʮ Ṫ Ă | Ḡ Ḭ Ᵽʮ ˙ ˝Y ḧ ɥ ⅃ | Ḡ Ḭ ª ₅ ⍑

: APⱣʮ i ɔ ɵ ª ı ḃ ' Ᵽʮ* Ẃ ı i ˝ ⍞ ♂ ɦ
Ǐ ˜ ʌ ♂ ⱨ ♣

: ̀ ̃ ồ ⱨ ε 2.5Hz ζ χ AP* ɸ. Ḋ ꝑ ı ⅃
´ ⱨ ♣ ´ ˜ ȁ Ẃ ψ
˙ ʌ ̃ ỹ ⱨ ε 0.25Hz ζ ε Ʒ 2s ⱥ 2s ζ χ AP* Ẃ
Ṫ Ă ı MS ↑ ỗ* Ẃ ı ω ɾ ¨A ì Ɔ ψ
, ʌ ̃ ⅛ ⱨ 4 ⅃ ⱨ ♣ Ꝁ ε ⱥ 3.8s ı Ʒ 0.2s ζ χ
AP* Ẃ Ṫ Ă ı MS ↑ ỗ* Ẃ ı ṇ ɾ ¨A ì Ɔ ı ⅄
ʌ ⍰ Ḥ ı ǎ ₩ Ã ψ
، ⅄ ̃ ˙Y ⅄ ồ ⱨ (2.5Hz): ḧ ɥ ♂ Ȁ ᵏ ı LED ON

[illegible]

- [illegible] AP [illegible] AP [illegible] AC [illegible]
- [illegible] AP [illegible] AP [illegible] ruijie [illegible] enable [illegible] apdebug
- [illegible] AP [illegible] AP [illegible] **session slot** *slot-id* [illegible] AP [illegible] [illegible] AP [illegible] [illegible] AP [illegible] [illegible] debug [illegible]
- [illegible] AP [illegible] show dvmg stae [illegible] AP [illegible]

```
Ruijie#show dvmg  state
index  slot id  type     fsm state      dev state  online time     system uptime  ifx
```

˜ ̀A ″ ∧

ΰ ̀ + ƒ β γ ὺ AP ʒ̆ ⊃ ỉ AP ѣ ʊ̃ ̀ ι ΄Ε Ω̣ Ṅ ỉ AP ⊃ AP ʒ̆ ἔ γ ѡ ″ γ ق Φ ″ ∧
ι Ḥ ϵ ́ ỉ AP ∨ ̊ ʒ N ⃞ ш ∧ ι ″ γ Ṅ ٩ ̀ ٩ ϵ ι Ṅ ‖ ϵ ╦ ΰ̆ AC ƒ β ⊃ AP ʒ̆ ⃞
ɲ ὲ ⊃ FLASH ∨ ژ ƒ % κ 11.1 B9P2 ° ́ Ȃ Ḋ ι Ṅ AP ʒ̆ ⊃ ỉ AP ƒ β D ̄ ∧ Φ ⊃ ″
∧ ι ″ ∧ ̀H ι ⌊ ª ̀H ☼ ╗ AP ʒ̆ ε AM5514&AM5528 ζ ⊃ ỉ AP(MAP552-W
MAP552\MAP552-S ∨)⃞ ∨ ι AC Ṅ ⋮ ̃Ω AP ʒ̆ ̈Ạ V̇ ⃞ ỉ AP ʒ N ̃Y ι ϊ ϋ ∨ ˙
AP ʒ̆ ί ι ق ΰ̆ ∧ ỉ AP ″ ∧

```
Ruijie(config)# ac-controller
Ruijie(config-ac)# active-bin-file am5528.bin
Ruijie(config-ac)# active-bin-file map552s.bin
Ruijie(config-ac)# ap-image auto-upgrade
```

```
Ruijie#show tftp-server  updating-list
IP Address        Interface        File Name        TX        Elapsed
```

˜ À ″ ⅄

ƥ AC i ˥ ˜ ỉ AP⃞ v ʒ Ụ ı ˡ Ɑ ڼ ص ᵘ ɲ show
yhuvlrq ⅇ v0rwڤ Φ ˥ ˜ ı ʜ Ḿ ΰ ˋ + ⃞ AP ω ڿ

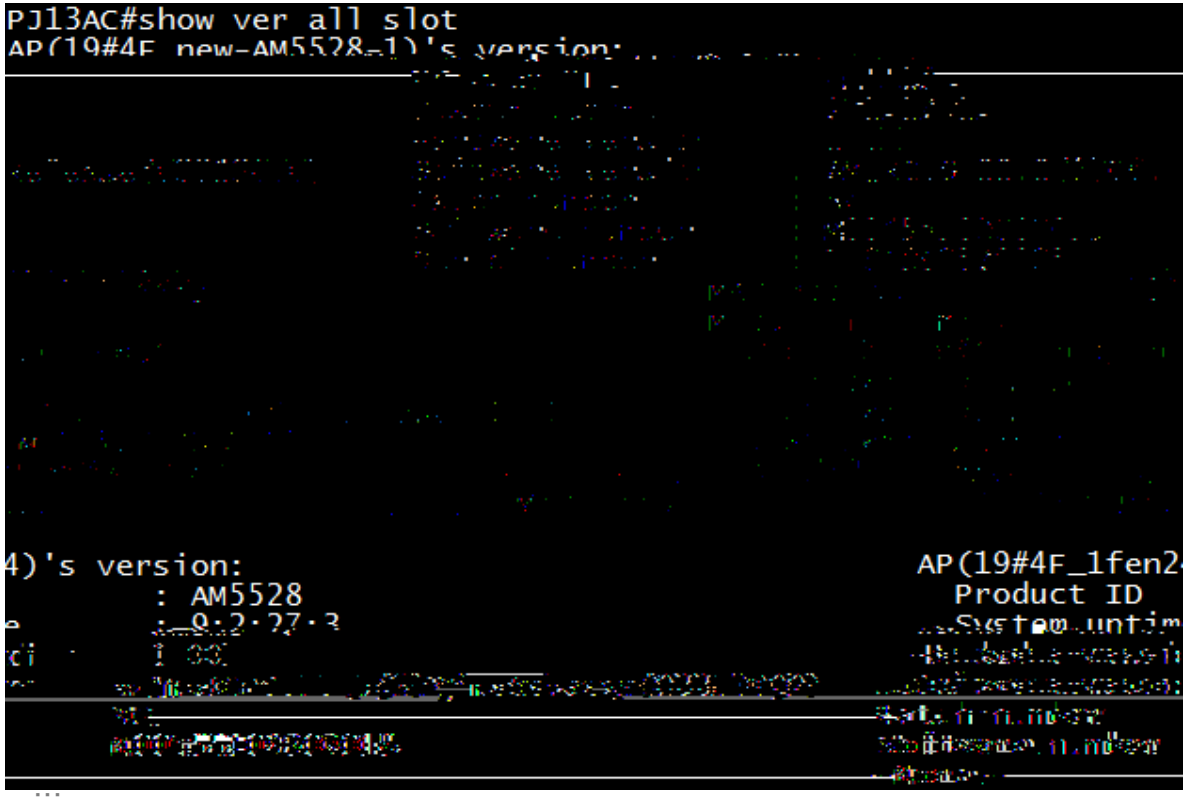

ج à ḥ Á ث ʷ χ www.ruijie.com.cn

ع Ţ ⁻ ă ⁶ ï ڎ χ
www.ruijie.com.cn/service.aspx

ج à ل ʌ ʿH ʿO n o ع χ
support.ruijie.com.cn

ϱ ۱ ¡ ʿO χ webchat.ruijie.com.cn

ʿH ʿH̃ʿY ♬ ۱ χ 4008-111-000